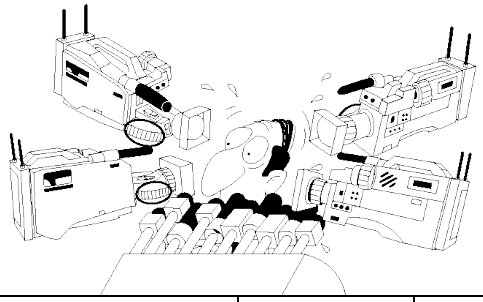

Issue: _____

Audience	Expected Reaction	What will they say / ask?	What do we say to them?	Broader Implications / Positioning Statements